Ergolux 2 Lite

Ergonomic Office Chair

Assembly Manual

formulav-line.com

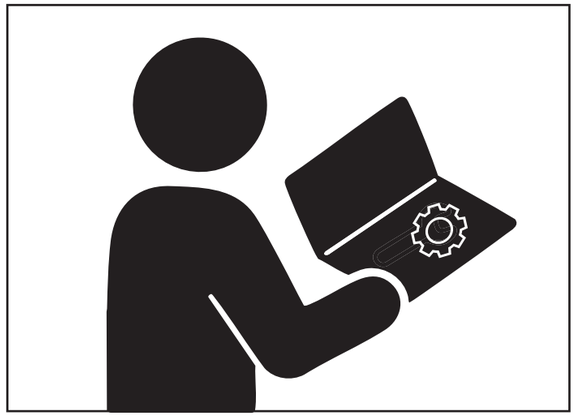

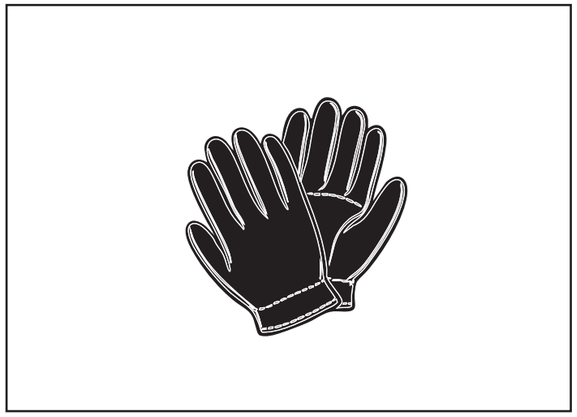

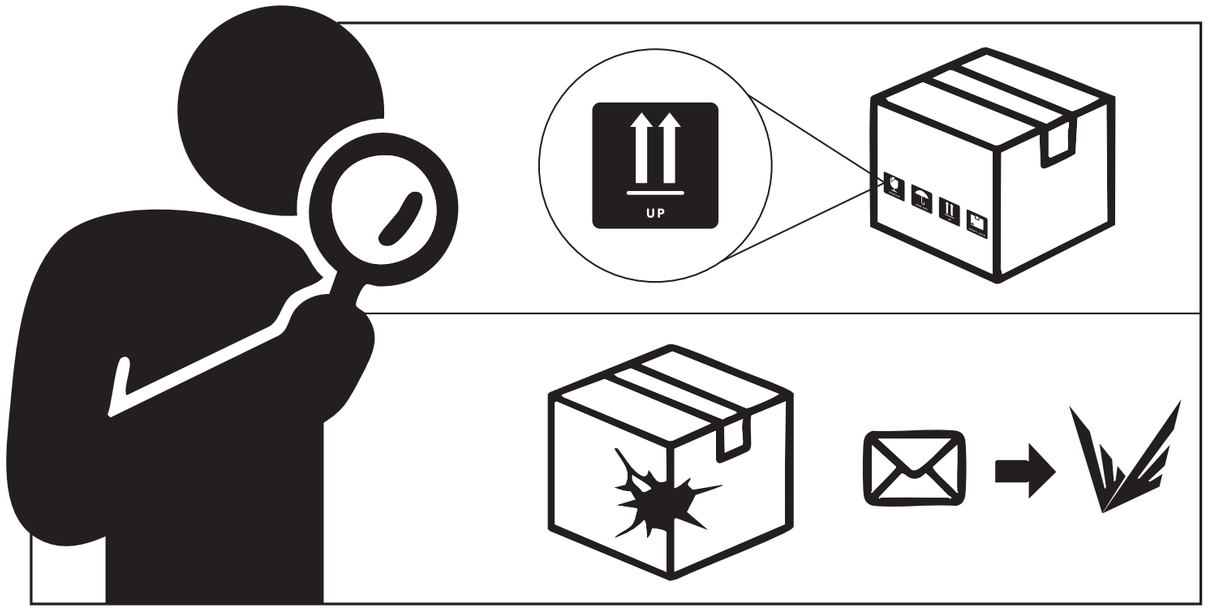
UP

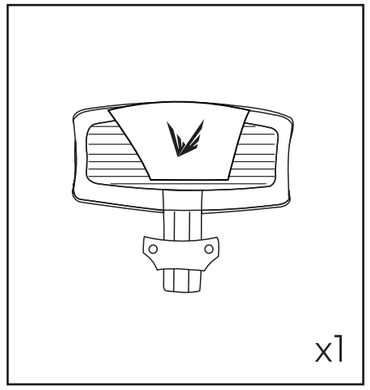
x1

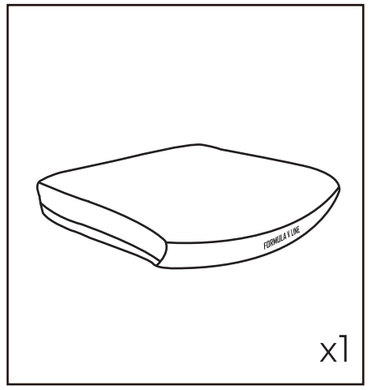
x1

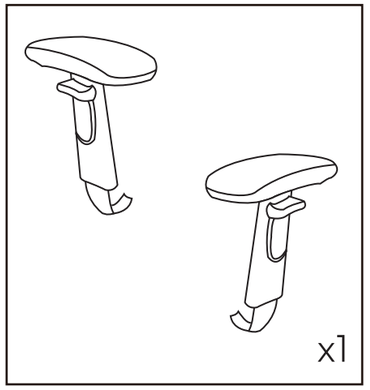
x1

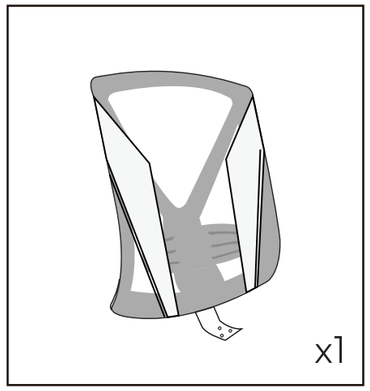
x1

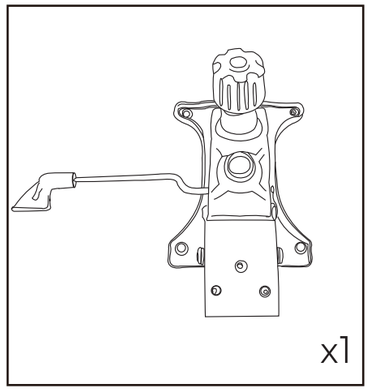
x1

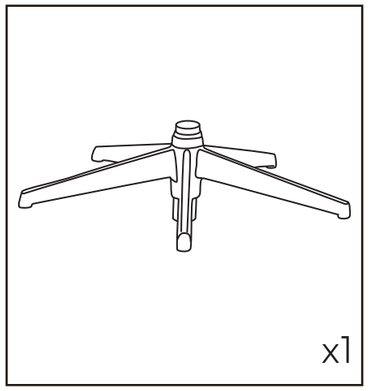
x1

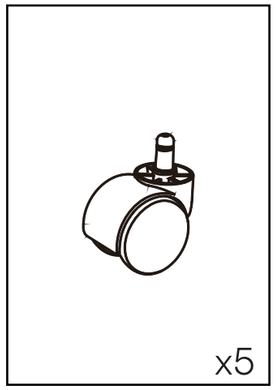
x5

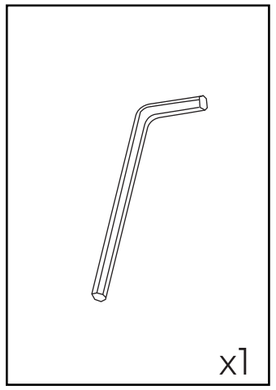
x1

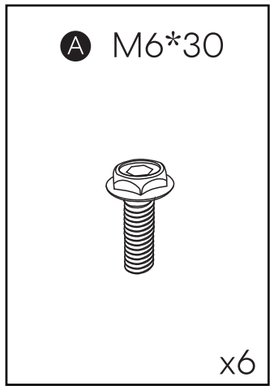
A M6*30
x6

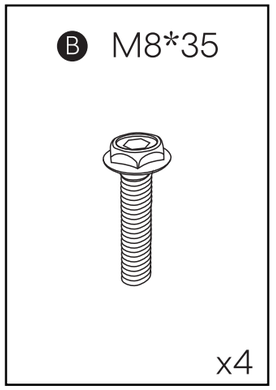
B M8*35
x4

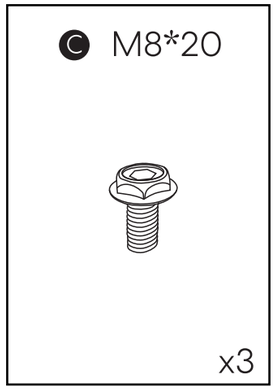
C M8*20
x3

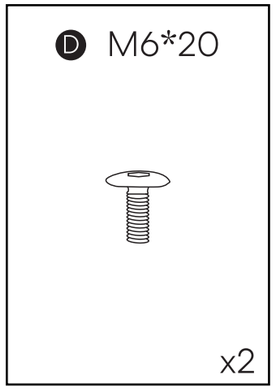
D M6*20
x2

1.

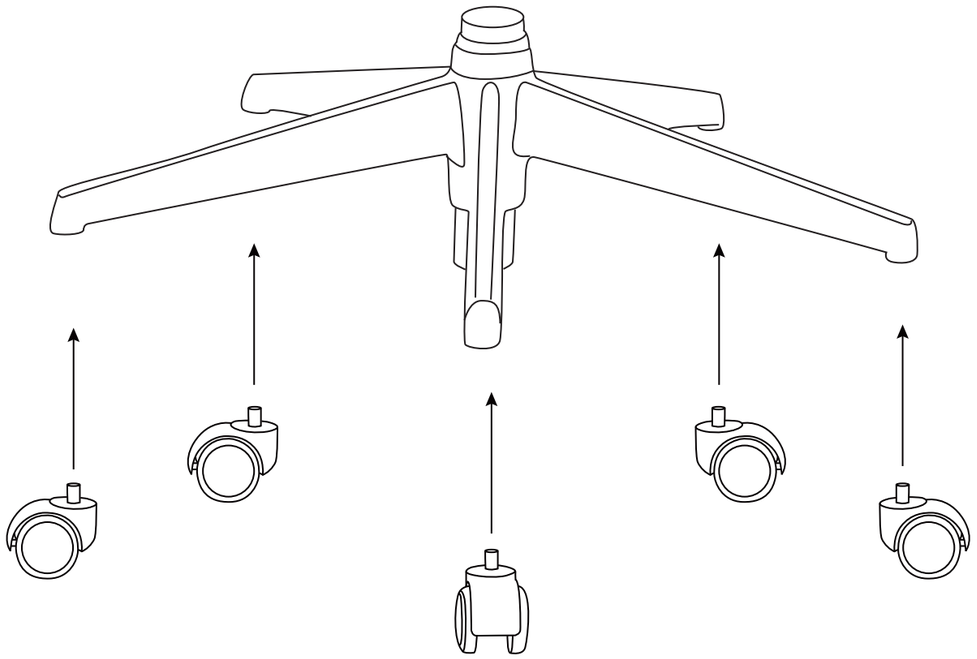

2.

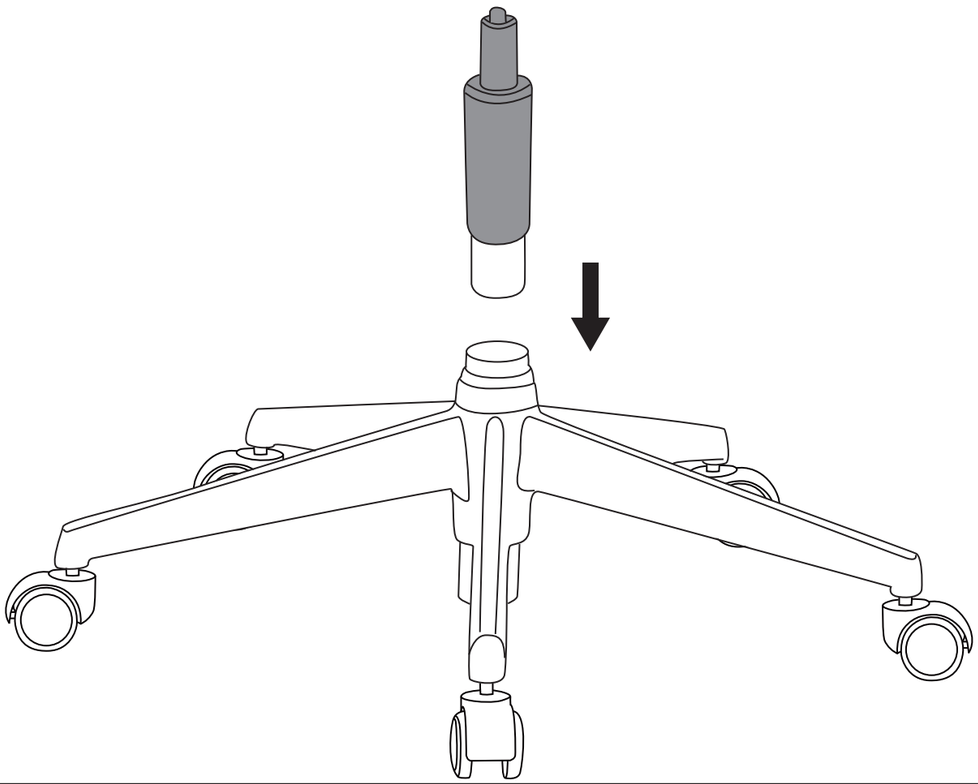

3.

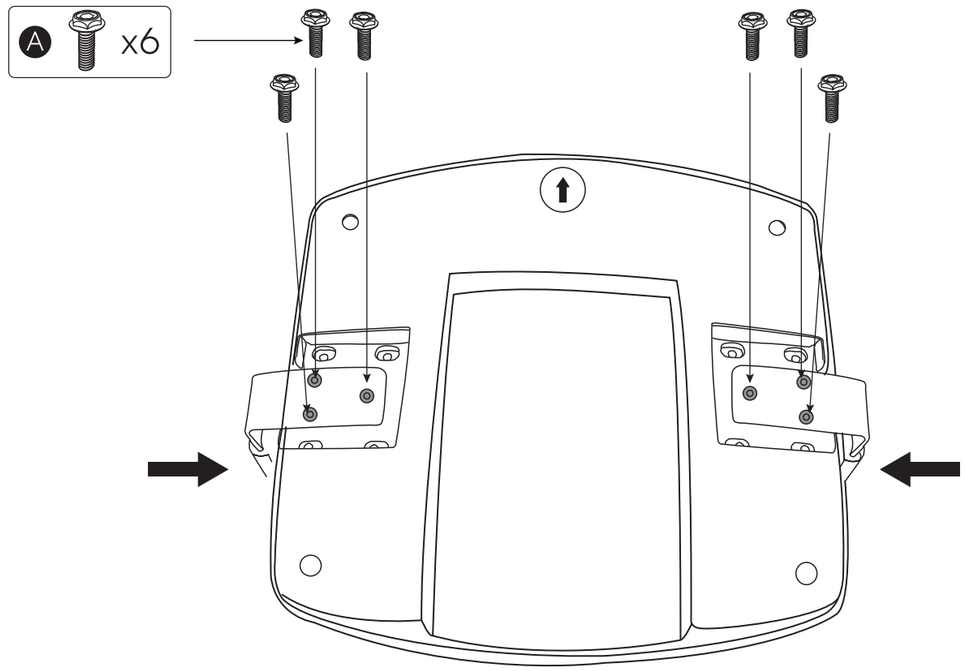

4.

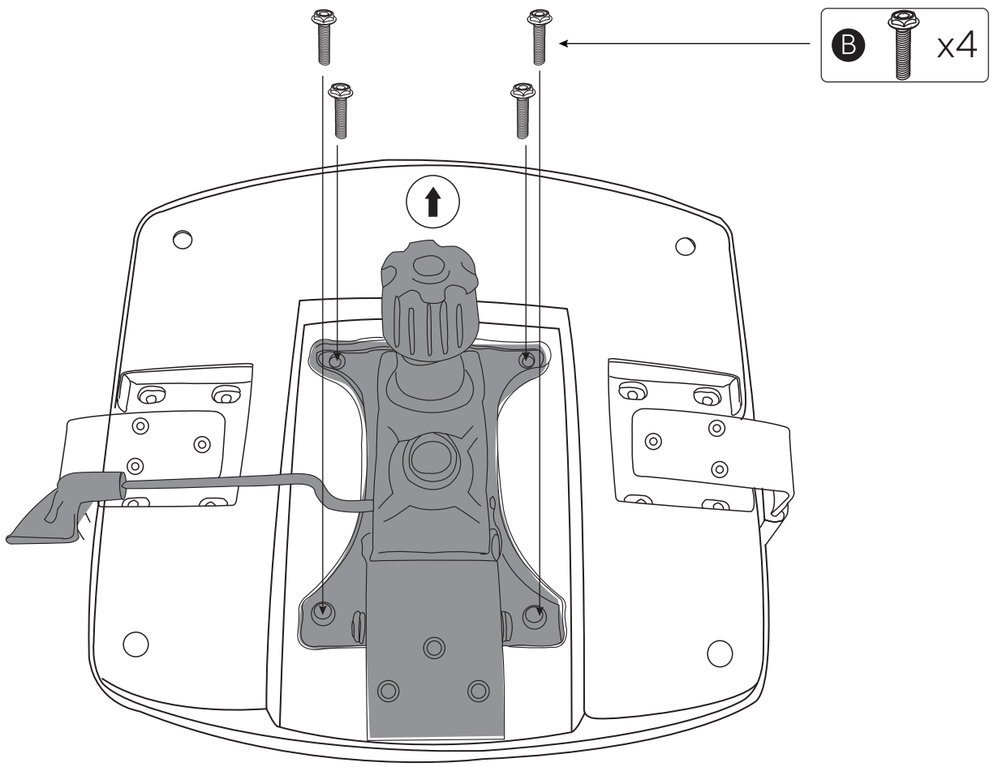

5.

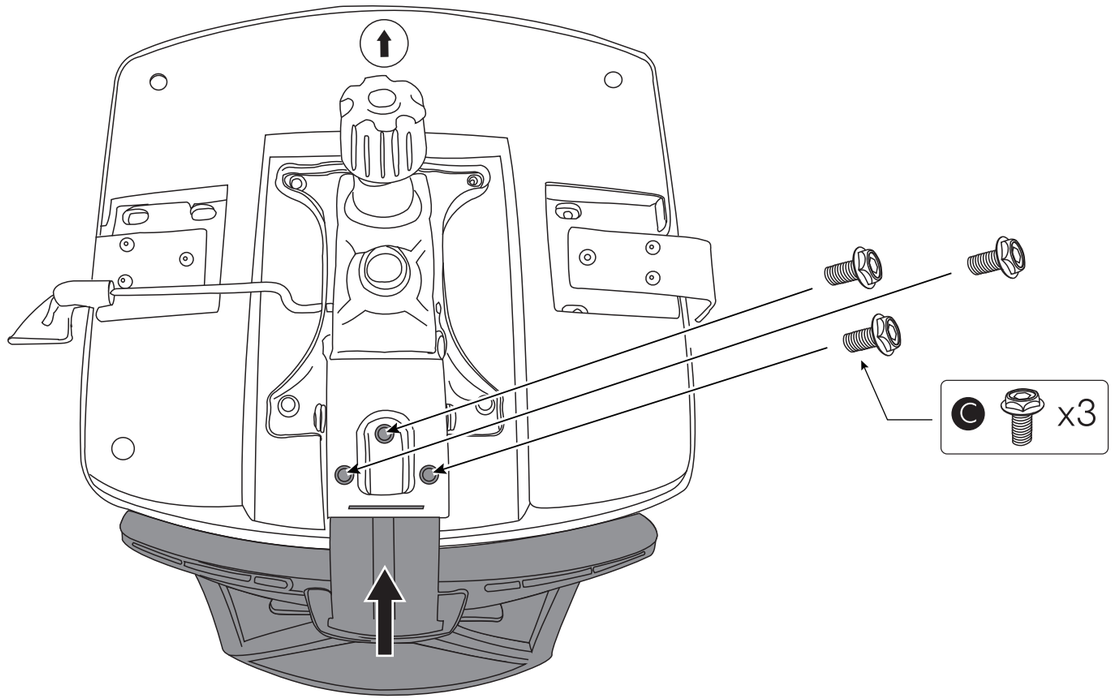

6.

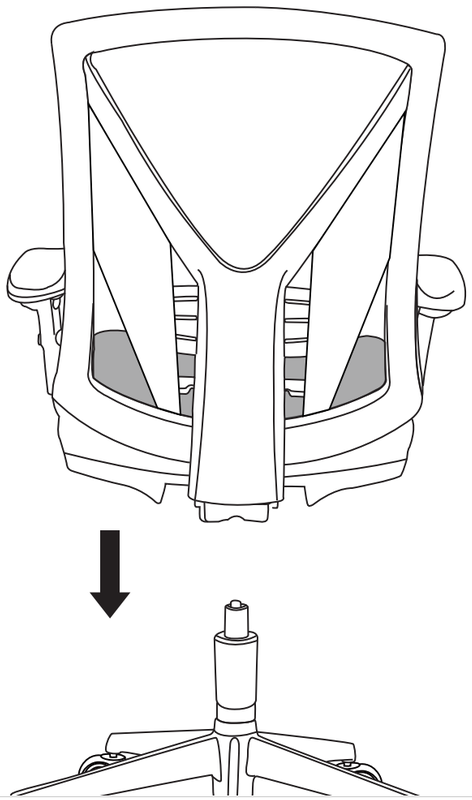

7.

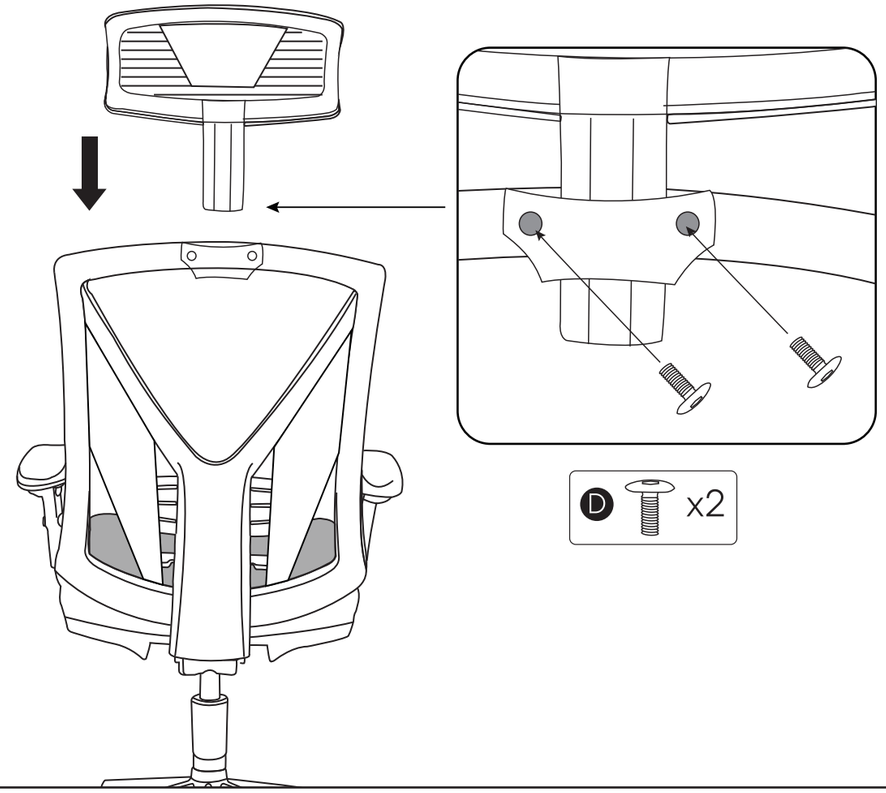

8.

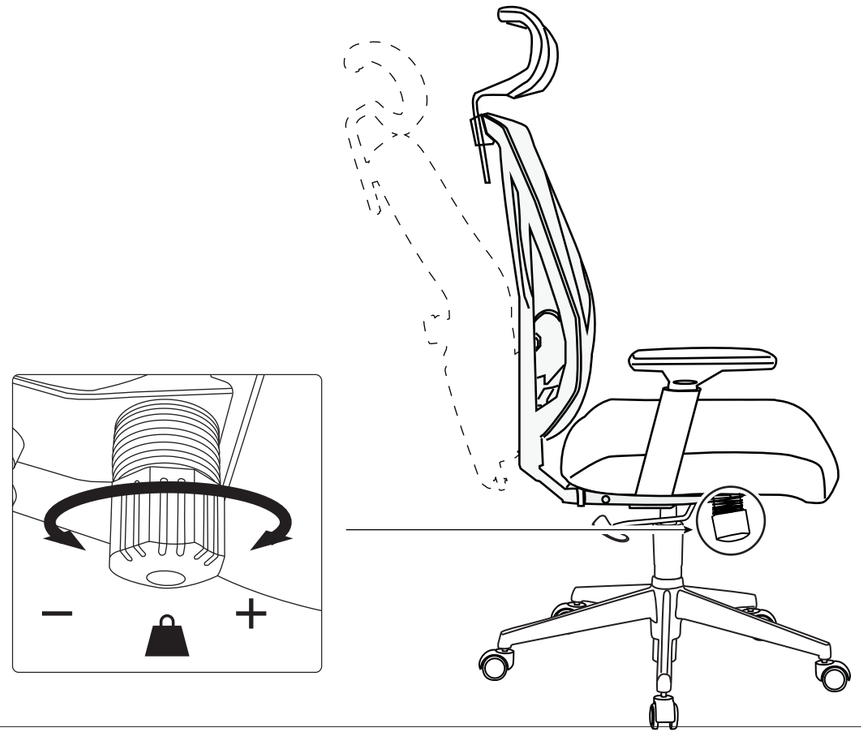

9.

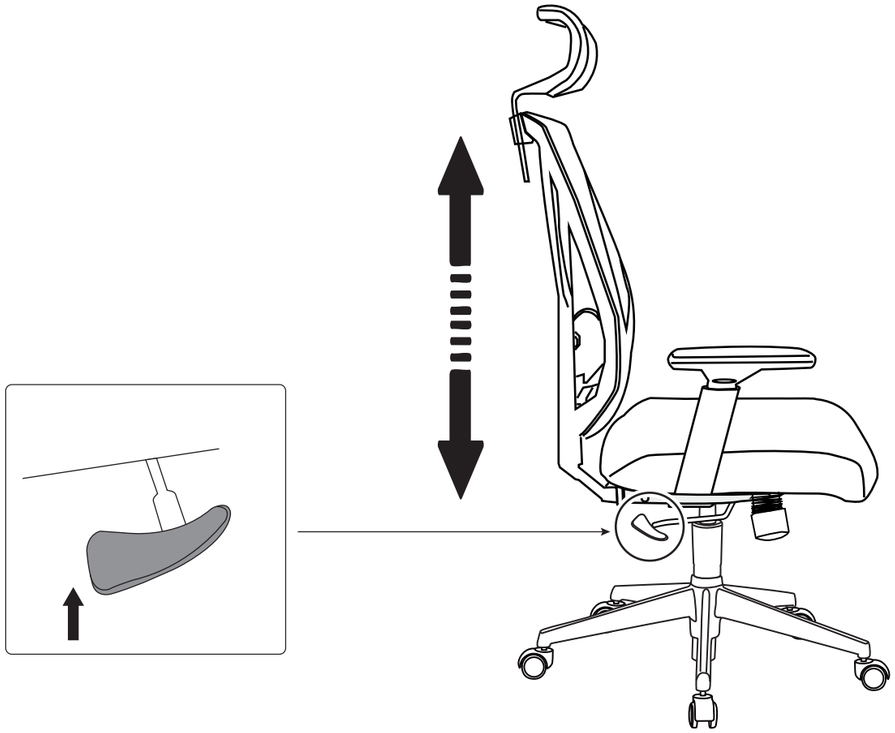

10.

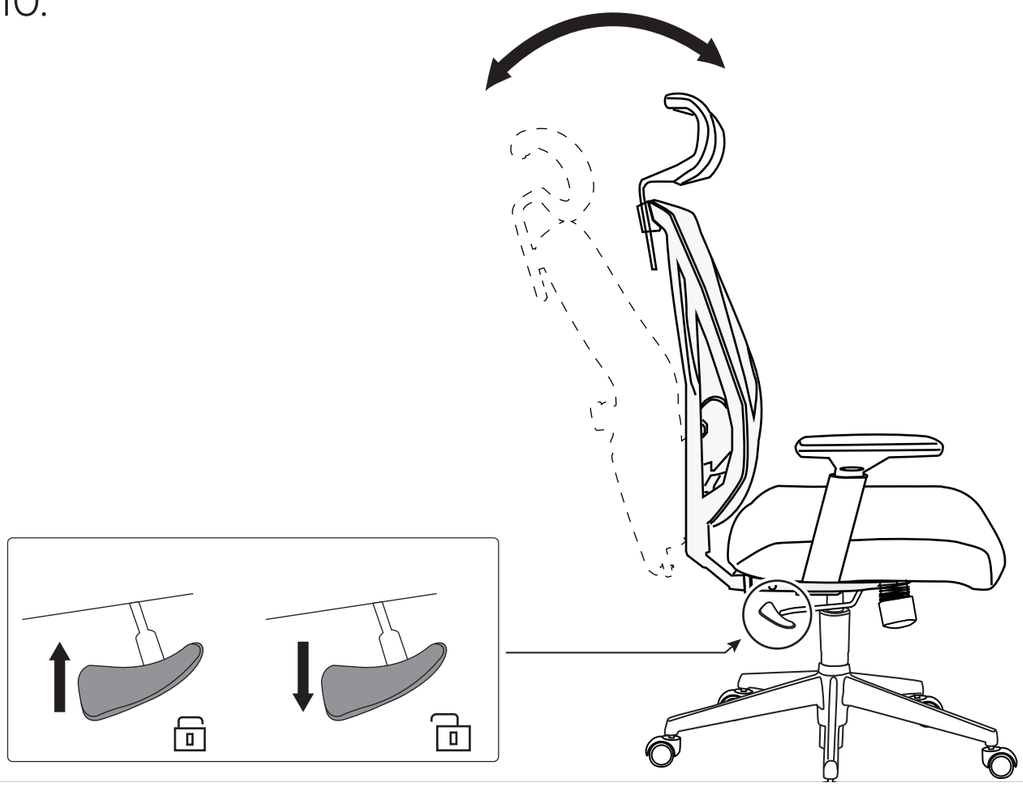

11.

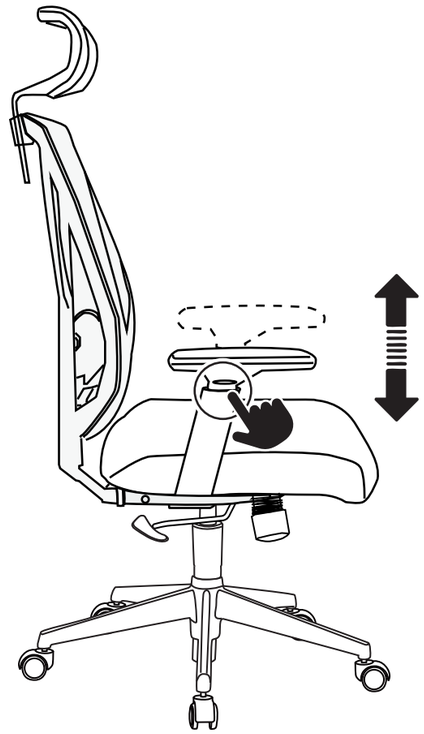

12.

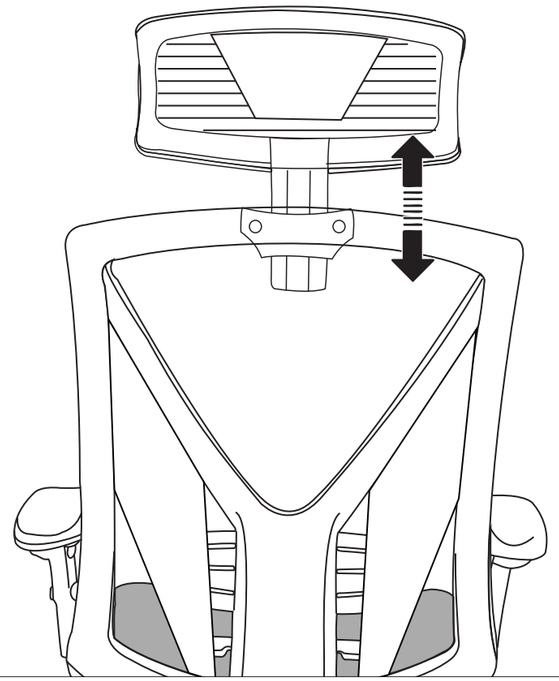

Cleaning Instructions

- Regularly vacuum the seams of the chair to maintain cleanliness.
- Do not use harsh cleaning agents such as acetone.
- Avoid prolonged exposure to direct sunlight.

Intended Use and User Guidelines

- Not suitable for children under 8 years old.
- Maximum weight capacity: <125 kg.

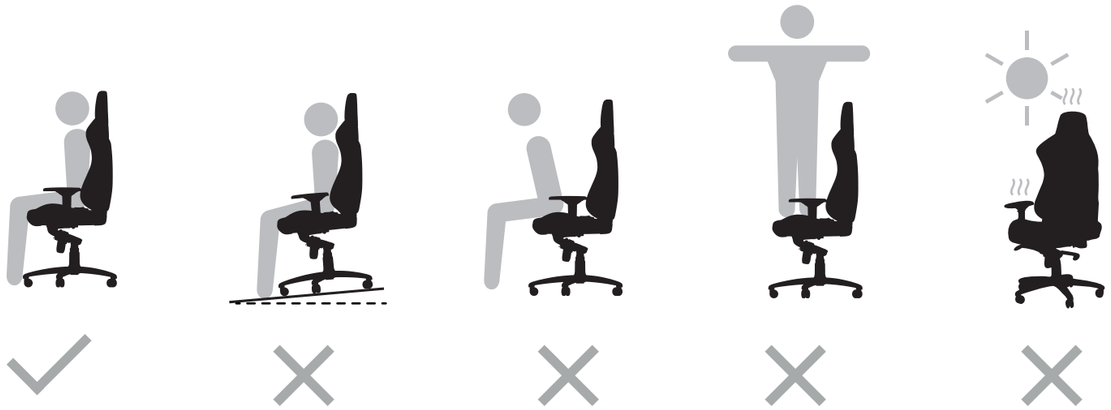

Maintenance and Repairs

- After approximately one week of use, inspect and ensure that all screws are securely tightened.
- Do not attempt to repair this product on your own, especially the gas lift mechanism.

Recommended Height: 155cm-180cm (5'1"-5'11")
Maximum Weight: <125kg.
Temperature Interval at Usage: +50 up to +104 °F/+10 °C up to + 40 °C.
Temperature Interval at Storage: 0 up to 158 °F/-18 °C up to 70 °C.
Humidity: 20% up to 80% at 104 °F/40 °C.

Disposal and Recycling

Chair must be disposed of separately from household waste and recycled in accordance with local environmental regulations.

Properly separating chair from general waste helps reduce landfill and incineration volumes, minimizing potential negative impacts on both human health and the environment.

Warranty

Before contacting the point of purchase or an authorized local agent, please prepare the following information:

1. Proof of purchase (invoice or receipt).
2. A photo of the serial number (SN), located on the underside of the product.
3. Photos or videos clearly illustrating the issue.
4. A photo of the complete product.

Ergolux 2 Lite

Ergonomic Office Chair

formulav-line.com

FR

Donnez ou recyclez vos meubles.

Association ou Magasin ou Déchèterie

https://quefairedemesdechets.fr

EUROPEAN STANDARDS EU EN 1335

BIFMA